Design of Cotton Picking Manipulator

Ji Fulu*,li xiu

Zhejiang Ocean University, Zjou, Zhoushan, China

1540832871@qq.com

*Corresponding Author

Keywords: Cotton, Picking manipulator, Mechanism design, Working space, Optimized design

Abstract: At present, most of the cotton picking machines in the market use high-speed airflow to extract cotton. When the cotton is too tight inside the boll, the airflow is extremely difficult to extract the cotton, resulting in incomplete cotton picking, which in turn reduces the efficiency of cotton picking. In addition, the airflow When the cotton is transported through the pipeline, the cotton with high humidity is not easy to deform, which causes the problem of clogging inside the device. The cotton picking manipulator designed this time can be used to solve the problems raised in the technical background above. In view of some of the existing problems of cotton picking in China, the method of replacing the cotton picking manipulator with manual and cotton picker picking quilt has been researched. Based on the analysis of cotton agricultural characteristics and harvest characteristics, comprehensive analysis of the current domestic cotton planting methods and cotton collection requirements and conditions, and in accordance with the principles and methods of designing manipulators, a multi-degree-of-freedom harvesting cotton picking is constructed. Manipulator. In order to allow the manipulator to quickly and freely harvest the cotton bolls on the cotton plant, it is also necessary to reduce the operating space of the manipulator and the size of the parts and mechanisms to the greatest possible extent, according to the growth and distribution space of the cotton boll and the cotton picking manipulator. Operational requirements, and analyze and simulate the design variables, optimization marks and constraints in a given space, optimize and calculate the established mathematical model, and use the MatLab optimization toolbox is used for programming, and the parameters of the internal and external components of the cotton picking manipulator have been optimized.

1. INTRODUCTION

my country is a big cotton growing country, and cotton harvesting has always been one of the important factors restricting the improvement of cotton economic efficiency. my country's cotton picking methods are mainly manual picking and cotton picking machine picking. Manual picking has low efficiency, high labor intensity, high picking cost, and great harm to the body; although cotton picker picking is efficient, its cost is too high and the picking quality is low. However, my country’s cotton planting area is vast and the scales are different. Xinjiang adopts intensive management methods and the production scale is relatively large; while the inland areas use extensive and decentralized management methods, with small scale, short fibers and long harvesting periods, which makes mechanized cotton harvesting useful. It may be implemented on a large scale in Xinjiang, but it is difficult to implement it in the vast inland cotton-producing areas. Therefore, the development of a cotton picking manipulator that is suitable for my country's cotton planting situation, has a fast cotton picking speed and high quality, has a broad market application prospect.[1]

The working environment of the agricultural picking robot is special, the working objects are complicated, and the structure requirements of the manipulator are very high. It is difficult to achieve the

  DOI: 10.25236/iccem.2021.043

ideal picking effect by directly purchasing existing industrial manipulators. In response to this situation, this article designed the cotton picking manipulator based on the spatial distribution characteristics of the picking targets under the cotton cultivation mode of the Eighth Division of the Xinjiang Construction Corps, based on the agronomic characteristics of cotton, and on the basis of analyzing its growth and picking characteristics.[2] A mathematical model for optimizing the parameters of the manipulator was established, combining the spatial distribution of cotton and the actual working space of the manipulator, and optimizing the size and parameters of the manipulator structure.

2. OVERALL DESIGN

A.Analysis of the target picking area

The cotton growth status, cotton plant morphology and planting environment were investigated in the 149th regiment of the Eighth Agricultural Division of Xinjiang Construction Corps. The results showed that the cotton plant height is generally (700 ~ 750) mm, the row spacing configuration is (100 + 660 + 100) mm, and the plant spacing is 95 mm. Most of the mature cotton boll blooms upwards due to photosynthesis. The cotton boll is usually composed of 3 to 5 petals of seed cotton. Each seed petal is attached to the cotton husk independently, and the cotton bolls are basically evenly distributed on the entire cotton plant; the height of the cotton bolls is basically the same. Between (200 ~ 750) mm, the single-row cotton plants are distributed in the range of 300mm before and after, and the two rows of cotton plants separated by 100mm are distributed in the range of 400mm. [3]

B.Equipment structure of cotton picking manipulator

The cotton picking manipulator includes a main arm. The top of one side of the main arm is connected with a connecting arm, and the outer wall of the main arm is located outside the connecting arm. A limit frame is fixed on both sides, and a picking mechanism is arranged between the limit frame and the main arm. The inside of the connecting arm is equipped with a screening mechanism, and the top side of the main arm is equipped with a PLC controller. [4]Through the set picking mechanism, the cotton in contact with the rubber conveyor belt can be quickly rolled into the inner top of the main arm to complete the cotton picking The process of cotton picking can improve the efficiency of cotton picking. Through the set screening mechanism, when using, cotton with a large water content will fall directly into the collection box under the influence of gravity, so as to quickly complete the classification of dry and wet cotton to avoid Cotton with a large water content will block the delivery pipe of the device, which greatly improves the stability of the device during operation.

The picking mechanism includes a grasping mechanism and a driving mechanism: the grasping mechanism includes a driving roller and a driven roller, the driving roller and the driven roller are both rotatably connected with the main arm through a rotating shaft, and the driving roller and the driven roller are co-located There are two groups, and the outer parts of the driving roller and the driven roller of the two groups are covered with rubber conveyor belts.

The driving mechanism includes a first motor, the first motor is installed inside the limit frame, and the transmission shaft of the first motor is connected with one end of the driving roller, and the first motor is electrically connected with the PLC controller.

The screening mechanism includes a second motor. The second motor is installed at one end of the connecting arm. The auger is arranged on the inner side of the connecting arm. One end of the auger is connected to the transmission shaft of the second motor. The other end extends to the inside of the main arm and is rotatably connected with the main arm through a rotating seat. The outer sides of the connecting arm are respectively connected with a connecting pipe and a collecting box through screwing, and the collecting box is located below the connecting pipe. An observation window is installed on the front surface of the collection box, and a gasket is sleeved on the outside of the connecting pipe. A blocking cover is connected to the bottom of the main arm, and the blocking cover is

an integral structure with the main arm. The top edge of the shield shows a circular arc chamfer transition to form a circular arc surface. The manipulator is shown in Figure 2.1

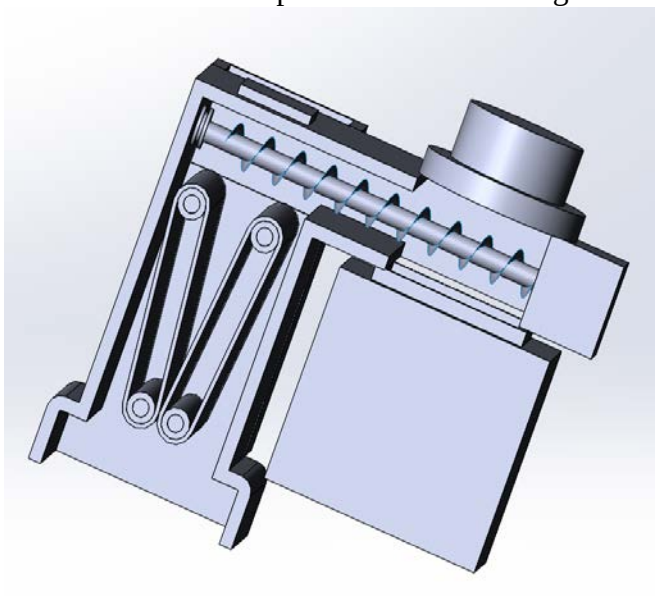

Fig.2 1. the Manipulator

C.Working principle of cotton picking manipulator

Referring to Figure 2.2, the cotton picking manipulator includes a main arm 4, the top of one side of the main arm 4 is connected with a connecting arm 9, and the outer wall of the main arm 4 is located outside the connecting arm 9, both sides are fixed with a limit frame 12, limit frame A picking mechanism is arranged between 12 and the main arm 4, a screening mechanism is arranged inside the connecting arm 9, and a PLC controller 6 is installed on the top side of the main arm 4. The model of the PLC controller 6 is CPU226, and the rated power is 11W , The working voltage is 24V.

The picking mechanism includes a grasping mechanism and a driving mechanism. The grasping mechanism includes a driving roller 3 and a driven roller 13. Both the driving roller 3 and the driven roller 13 are rotatably connected with the main arm 4 through a rotating shaft. The driving roller 3 and the driven roller 13 are provided with two groups, two groups of driving rollers 3 A rubber conveyor belt 2 is sheathed on the outside of the driven roller 13 and the driven roller 13. The driving mechanism includes a first motor 14 installed inside the limit frame 12, and the transmission shaft of the first motor 14 is connected to one end of the driving roller 3, and the first motor 14 is electrically connected to the PLC controller 6 . When in use, the first motor 14 can drive the driving roller 3 to rotate. Under the action of the driven roller 13, the rubber conveyor belt 2 can be rotated. Then the rubber conveyor belt 2 can be brought into contact with cotton, and the cotton will be transferred by the two rubber conveyor belts. 2 is rolled into the inner top of the main arm 4 to complete the cotton picking process.[5]

Referring to Figure 2.2, the screening mechanism includes a second motor 10, the second motor 10 is installed at the inner end of the connecting arm 9, the inner side of the connecting arm 9 is provided with a screwdriver 5, one end of the screwdriver 5 and the second motor 10 transmission .[6]The shaft is connected, the other end of the auger 5 extends to the inside of the main arm 4 and is rotatably connected to the main arm 4 through a rotating seat. The outer sides of the connecting arm 9 are respectively connected with a connecting pipe 8 and a collection box 11 by screwing. The collection box 11 is located below the connecting pipe 8, and the models of the first motor 14 and the second motor 10 are both GMTA020-18U25B. When in use, the second motor 10 can drive the auger 5 to rotate, and then can transfer the cotton on the top of the main arm 4 to the connecting arm 9, and at the same time, the connecting pipe 8 can be pumped. During the pumping process, the dry cotton It will be directly pumped away through the connecting pipe 8, and the cotton with a large water content will fall

directly into the collection box 11 under the influence of gravity, so that the classification of dry and wet cotton can be completed quickly. Referring to Figure 2.2, an observation window is installed on the front surface of the collection box 11, and a gasket 7 is sleeved on the outside of the connecting pipe 8. The gasket 7 can further improve the sealing performance when the pipe is connected to the connecting pipe 8. The collection can be observed through the observation window.The cotton with high water content inside the box 11 can be used to clean the collection box in time, so that the device can be used for a long time.

Referring to Figure 2.2, the bottom of the main arm 4 is connected with a shield 1, which is an integrated structure with the main arm 4. When in use, the shield 1 can directly cover the outside of the cotton to be picked, thereby avoiding other debris.Into the picking organization, in order to improve the safety of the device in use; The top edge of the shield 1 has a circular arc chamfer transition to form a circular arc surface 15 to prevent the edge of the shield 1 from scratching the staff.[7]

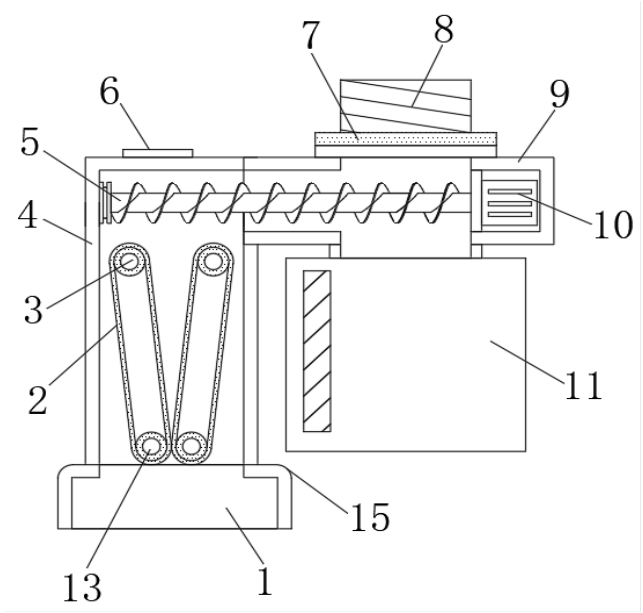

Figure 2.2. In the picture: 1. Shield; 2. Rubber conveyor belt; 3. Active roller; 4. Main arm; 5. Screw auger; 6. PLC controller; 7. Washer; 8. Connecting pipe; 9. Connecting arm; 10. The second motor; 11. The collection box; 12. The limit frame; 13. The driven roller; 14. The first motor; 15. The arc surface.

3. MANIPULATOR DESIGN

A.*Design of Manipulator Grasping Mechanism*

The grasping mechanism includes a driving roller and a driven roller. Both the driving roller and the driven roller are rotatably connected with the main arm through a rotating shaft. There are two groups of the driving roller and the driven roller. The two groups are outside of the driving roller and the driven roller. They are equipped with rubber conveyor belts. [8]The organization is shown in Figure 3.1 and 3.2.

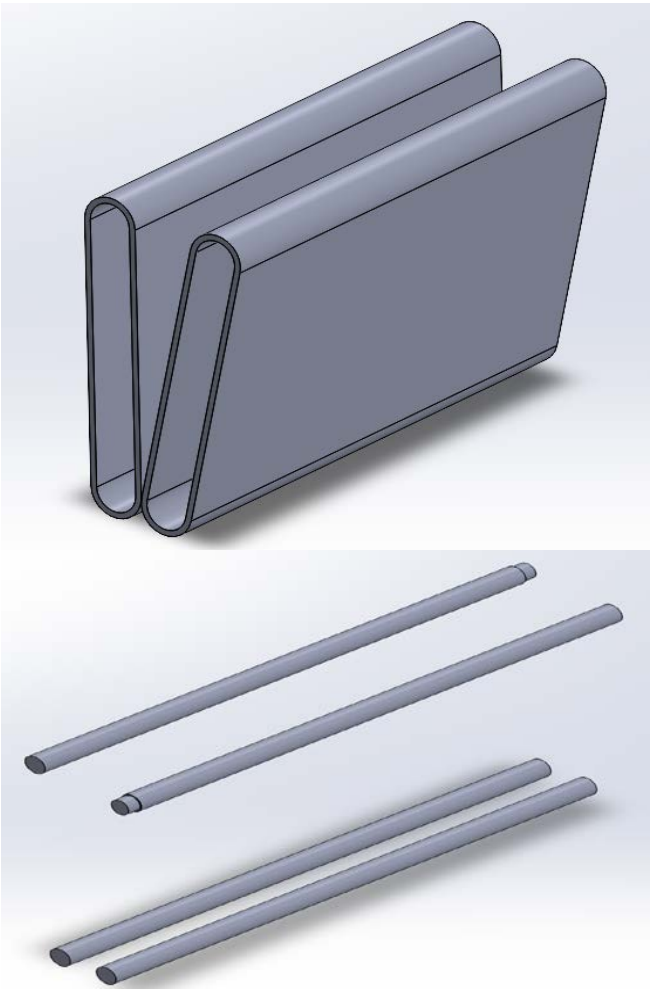

Fig.3 Organization

B.Design of Manipulator Drive Mechanism

The driving mechanism includes a first motor and a second motor. The first motor is installed inside the limit frame, and the transmission shaft of the first motor is connected with one end of the driving roller, and the first motor is electrically connected with the PLC controller. The second motor is installed at the inner end of the connecting arm, an auger is arranged on the inner side of the connecting arm, and one end of the auger is connected with the transmission shaft of the second motor. [9]The motor is shown in Figure 3.3 and 3.4.

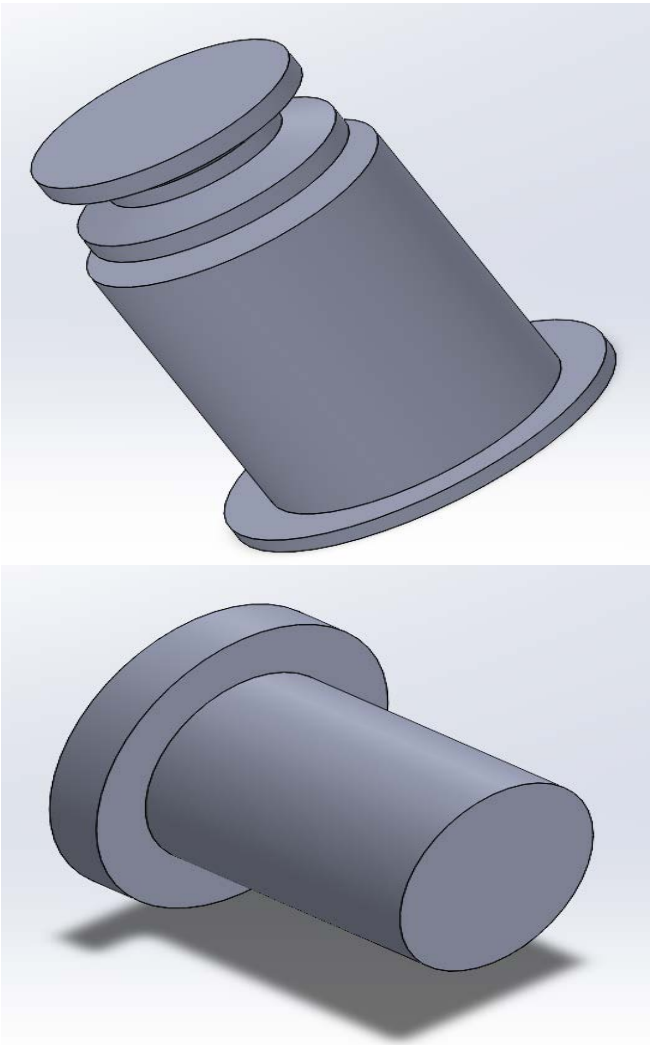

Fig.4 Motor

4. ACKNOWLEDGMENT

Regarding this thesis, due to my limited knowledge, the mastery of relevant software is not mature enough, and time is limited to objective factors such as time, resulting in the final simulation design has not reached the optimal level, there are some defects and deficiencies, to a certain extent Affected the results of the experiment, which made me feel a bit regretful. [10]Of course, the completion of the thesis is not the end. I will continue to continue this topic in my future career, and I believe I can improve it someday in the future.

REFERENCES

[1] Zhou Wenchao. The design of the intelligent direction control system for the picking port based on the handheld cotton picker [D]. Nanjing: Nanjing Agricultural University, 2013.

[2] Lin Lili. Design of loading and unloading manipulator in ultrasonic welding process[D]. Wuhan: Hubei University of Technology, 2017.

[3] Zhou Fei. Research on the motion simulation of a four-degree-of-freedom articulated manipulator[D]. Nanjing: Nanjing University of Aeronautics and Astronautics, 2015.

[4] Zhang Jinguo.Study on optimization of structure parameters of portable cotton picking manipulator[J].Chinese Journal of Agricultural Machinery Chemistry,2019,40(08):3-5.

[5] Wang Dandan. Apple target recognition and location method under the influence of overlap and occlusion[D]. Yang Ling: Northwest Sci-Tech University of Agriculture and Forestry, 2016.

[6] Huang Wenjia. Research and design of industrial robot motion control system[D]. Hangzhou: Zhejiang University of Technology, 2014.

[7] Ma Gang, Wang Zhidong, Han Songyuan. The design of a new type of handling and palletizing manipulator[J]. Machine Design and Manufacturing, 2000(4):6-7.

[8] Pu Yunguo,Wang Zhigang,Zhu Liang.Study on the design of mechanical arm structure based on agricultural picking[J].Journal of Agricultural Mechanization Research,2018,40(09):39-43.

[9] Wu Zhenbiao. Industrial robot[M]. Wuhan: Huazhong Science and Technology Press, 1997: 25-35.

[10] Pu Lianggui, Ji Minggang. Mechanical Design, Seventh Edition. Beijing: Higher Education Press, 2001:10.